Five variable map

- Simplify the Boolean function:
- F(A,B,C,D,E)=∑(0,2,4,6,9,11,13,15,17,21,25,27,29,31)

AB \ CDE	000	001	011	010		110	111	101	100
00	0	1	3	2		6	7	5	4
01	8	9	11	10		14	15	13	12
11	24	25	27	26		30	31	29	28
10	16	17	19	18		22	23	21	20

F(A,B,C,D,E)=∑(0,2,4,6,9,11,13,15,17,21,25,27,29,31)

AB \ CDE	000	001	011	010	110	111	101	100
00	1			1	1			1
01		1	1			1	1	
11		1	1			1	1	
10		1					1	

- F= A'B'E' +BE+AD'E

Product of sums simplification

- F(A,B,C,D)= ∑(0,1,2,5,8,9,10)

AB \ CD	00	01	11	10
00	1	1	0	1
01	0	1	0	0
11	0	0	0	0
10	1	1	0	1

- F'= AB+CD+BD'
- Taking complement of F' , obtain F
- F= (A'+B')(C'+D')(B'+D)
- This is the product of sum terms.

Five variable map

- Simplify the Boolean function:
- F(A,B,C,D,E)=∑(0,2,4,6,9,11,13,15,17,21,25,27,29,31)

AB \ CDE	000	001	011	010		110	111	101	100
00	0	1	3	2		6	7	5	4
01	8	9	11	10		14	15	13	12
11	24	25	27	26		30	31	29	28
10	16	17	19	18		22	23	21	20

F(A,B,C,D,E)=∑(0,2,4,6,9,11,13,15,17,21,25,27,29,31)

AB \ CDE	000	001	011	010	110	111	101	100
00	1			1	1			1
01		1	1			1	1	
11		1	1			1	1	
10		1					1	

- F= A'B'E' +BE+AD'E

Product of sums simplification

- F(A,B,C,D)= ∑(0,1,2,5,8,9,10)

AB \ CD	00	01	11	10
00	1	1	0	1
01	0	1	0	0
11	0	0	0	0
10	1	1	0	1

- F'= AB+CD+BD'
- Taking complement of F' , obtain F
- F= (A'+B')(C'+D')(B'+D)
- This is the product of sum terms.

Rule of NAND logic diagram

The rule for obtaining the NAND logic diagram:

- Simplify the function and express it in sum of products.
- Draw a NAND gate for each product term that has at least two literals.
- Draw a single NAND gate in the second level, with inputs coming from outputs for first-level gates.
- A term with a single literal requires an inverter in the first level.

- $F(A,B,C)= \sum(0,6)$
- $F= A'B'C'+ABC'$
- $F'= A'B+AB'+C$

A \ BC	00	01	11	10
0	1	0	0	0
1	0	0	0	1

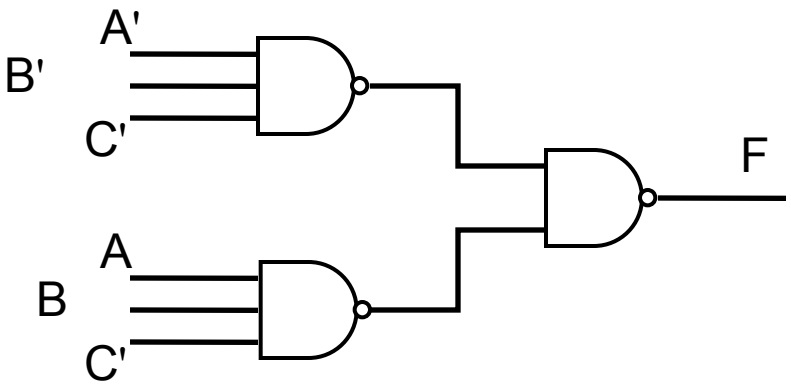

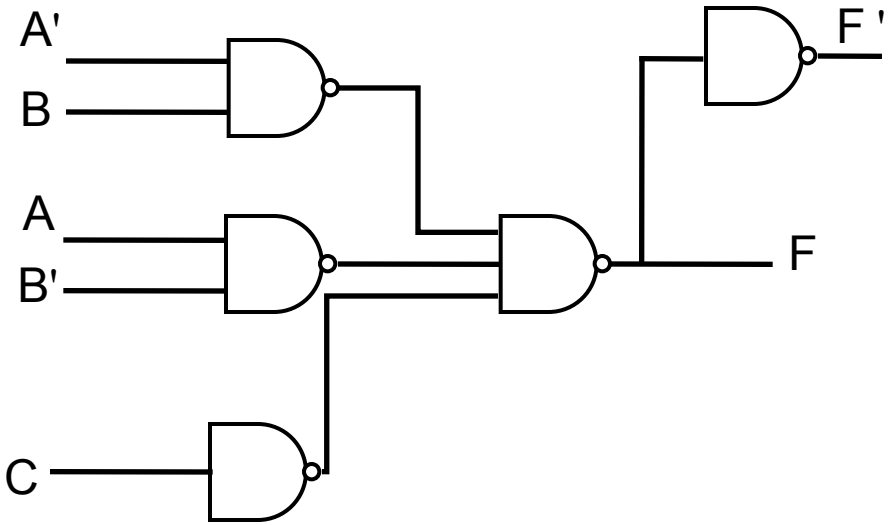

NOR Implication

Simplify the function and express it in product of sums.

- F=(A+B)(C+D)E

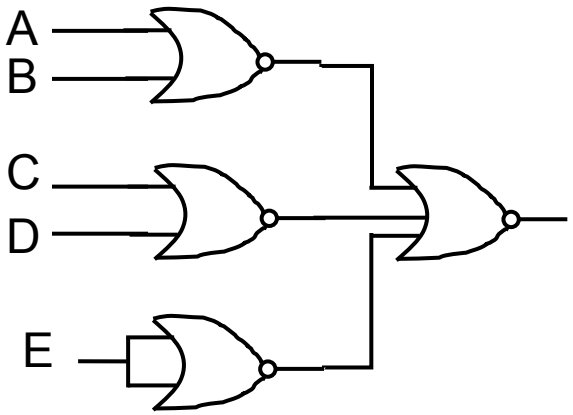

Don’t care conditions

- In a digital circuit, some input combination will never occur as long as the system is working properly.
- Therefore, function output does not depend on these input combination.
- So, we don’t care about these input combination.
- These don’t care condition can be used to simply the function.
- Denoted as X, may be 0 or 1.

$F(A,B,C,D) = \sum(1,3,7,11,15)$

$d(A,B,C,D) = \sum(0,2,5)$

AB \ CD	00	01	11	10
00	X	1	1	X
01	0	X	1	0
11	0	0	1	0
10	0	0	1	0

- Combining 1's and X's

$F = A'D + CD$

- Sum of products,

AB \ CD	00	01	11	10
00	X	1	1	X
01	0	X	1	0
11	0	0	1	0
10	0	0	1	0

- Combining 0's and X's

F'=AC'+D'

F=D(A'+C)

- Product of sums

Rule of NAND logic diagram

The rule for obtaining the NAND logic diagram:

- Simplify the function and express it in sum of products.
- Draw a NAND gate for each product term that has at least two literals.
- Draw a single NAND gate in the second level, with inputs coming from outputs for first-level gates.
- A term with a single literal requires an inverter in the first level.

$F(A,B,C)= \sum(0,6)$

- $F= A'B'C'+ABC'$
- $F'= A'B+AB'+C$

A \ BC	00	01	11	10
0	1	0	0	0
1	0	0	0	1

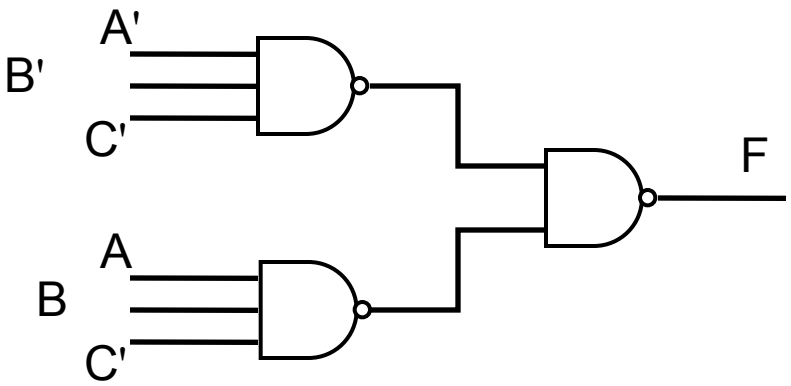

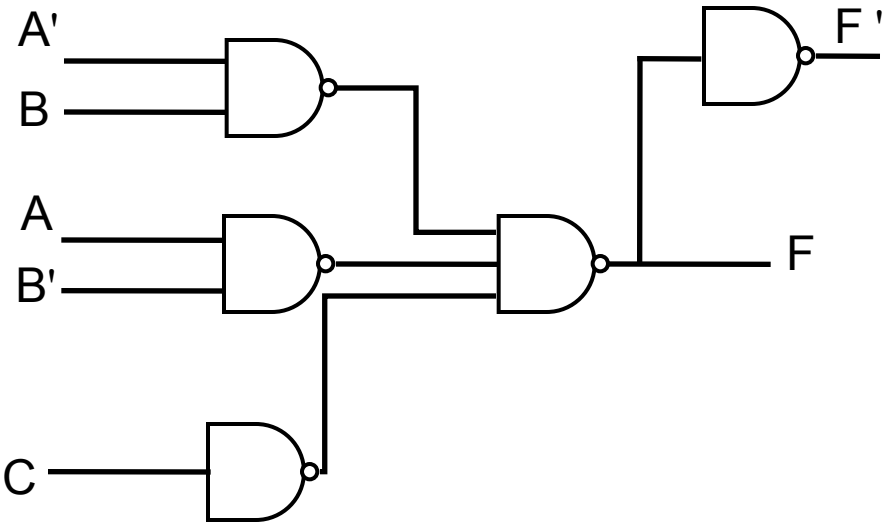

The tabulation method

- Map method does not suitable when the variable is exceed more than five or six.
- The tabulation method overcomes this difficulty.
- It is a step-by-step procedure.

Consists of two parts:

- Searching prime-implicants
- Choosing the best prime-implicants

Example 3-13: Simplify the following Boolean function using the tabulation method.

$F = \sum(0,1,2,8,10,11,14,15)$

Example 3-14: Determine the prime implicants of the following Boolean function using the tabulation method.

$F = \sum(1,4,6,7,8,9,10,11,15)$

Example 3-24: Simplify the following Boolean function using the tabulation method.